Oak Landscape Lighting

CATALOG #			
PROJECT NAME		TYPE	

SPECIFICATION SHEET

PRODUCT # UW413-AB Hooded Submarine

Housing: Die-cast aluminum knuckle and adjustable thumb screw. Easy adjustable for vertical tilt and horizontal rotation.

Lens: Heat resistant Convex Glass Lens is fully sealed with silicon sealant reduces water build-up and puddle on the lens. Flat Tempered Glass.

Socket: High Temperature ceramic socket with nickel contacts, Stainless Steel spring

Lamp: MR-16 Lamp type, 12V Max wattage 50W.

Gasket: A thick rubber gasket.

Wiring: 3' #18/2 Direct bury landscape lighting wire with UL listed, Pre-stripped hub-ready leads for quick installation.

Mounting: In-ground ABS Stake or Surface/Tree Mounting

Electrical Notes: A remote 12V transformer required, may be ordered to Elram, Inc. separately. Voltage range for 12V halogen lamps are 11V-12.5V. Voltage range for LED lamps are 9V-17V

Hardware: Hexagonal crew fix to part

Warranty: Limited lifetime Warranty

MOUNT	LIGHT ENGINE	SERIES	COLOR TEMP	FINISH	LUMEN	BEAM °
UW		413				
UW - Under Water	**blank** LED MR16	Hooded Submarine	**WW** 2700K **3K** 3000K **4K** 4000K **5K** 5000K	**AB** Antique Bronze	**04** 4Watt (300lm) **06** 6Watt (450lm) **07** 7Watt (520lm)	**15** 15° **45** 45° **60** 60°

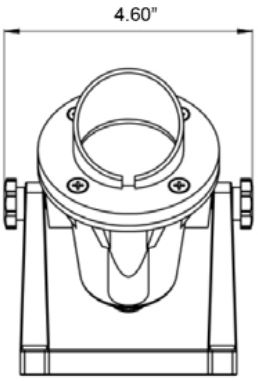

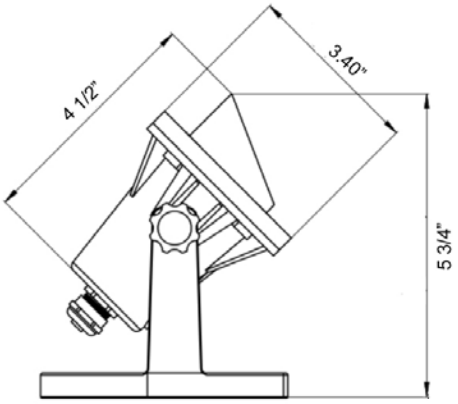

© 2020 ELRAM, Inc. Elram, Inc. holds the right to change the design of our products at any time.